Edon Corp. 1160 Easton Rd., Horsham PA. 19044
215/672-8050 FAX 215/672-9014

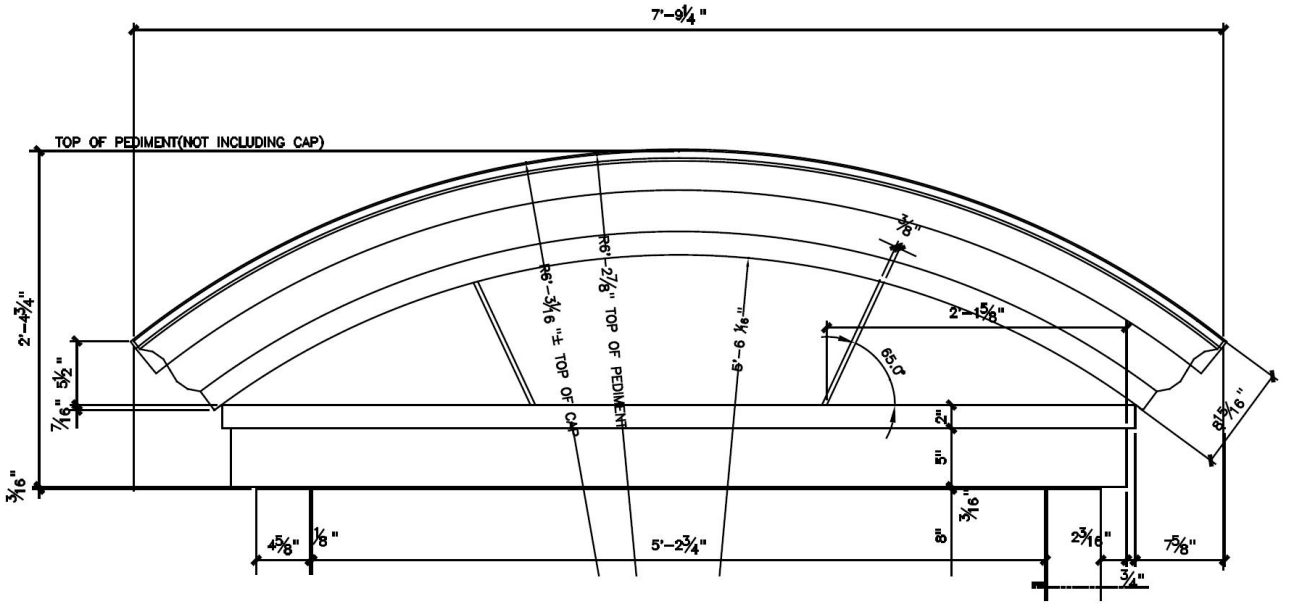

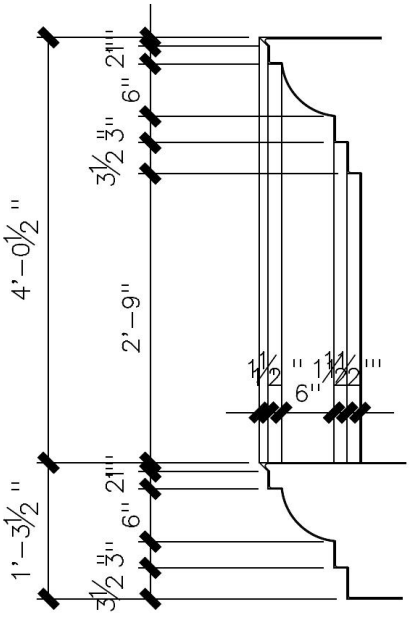

EE-5

Ornamental Door Surround-Header