EDON fiberglass

~ www.edon.com ~

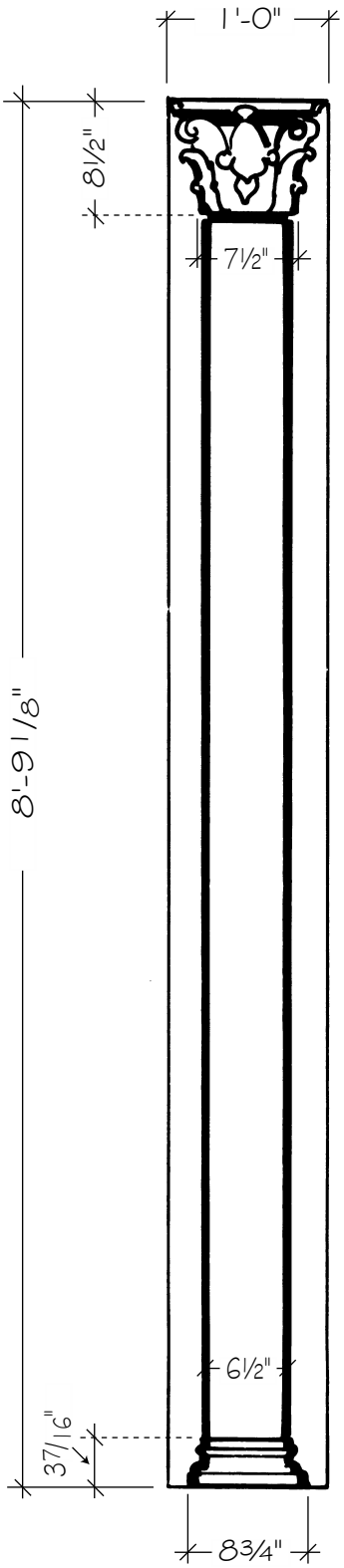

SHAFT DEPTH=3¼"

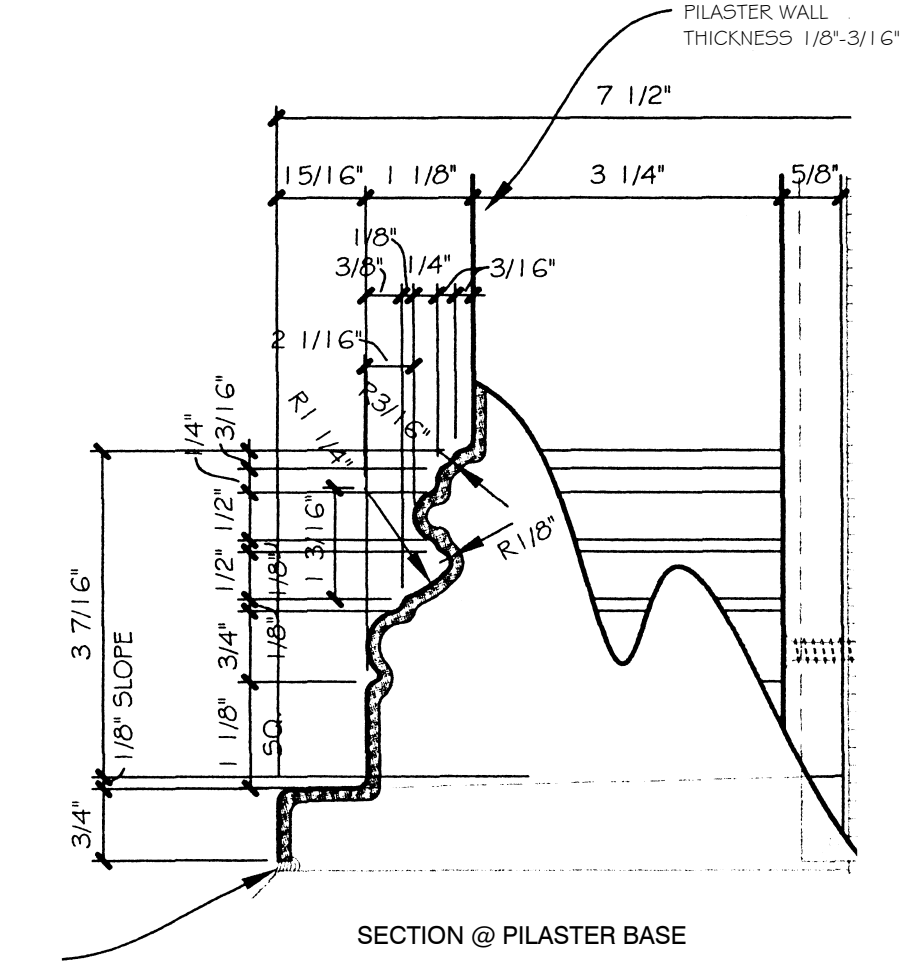

SECTION @ PILASTER BASE

EP-124
CORINTHIAN PILASTER

Edon Corp. 1160 Easton Rd., Horsham, PA 19044 ~ Phone: 215/672-8050 ~ Fax: 215/672-9014 ~ Email: edon@edon.com